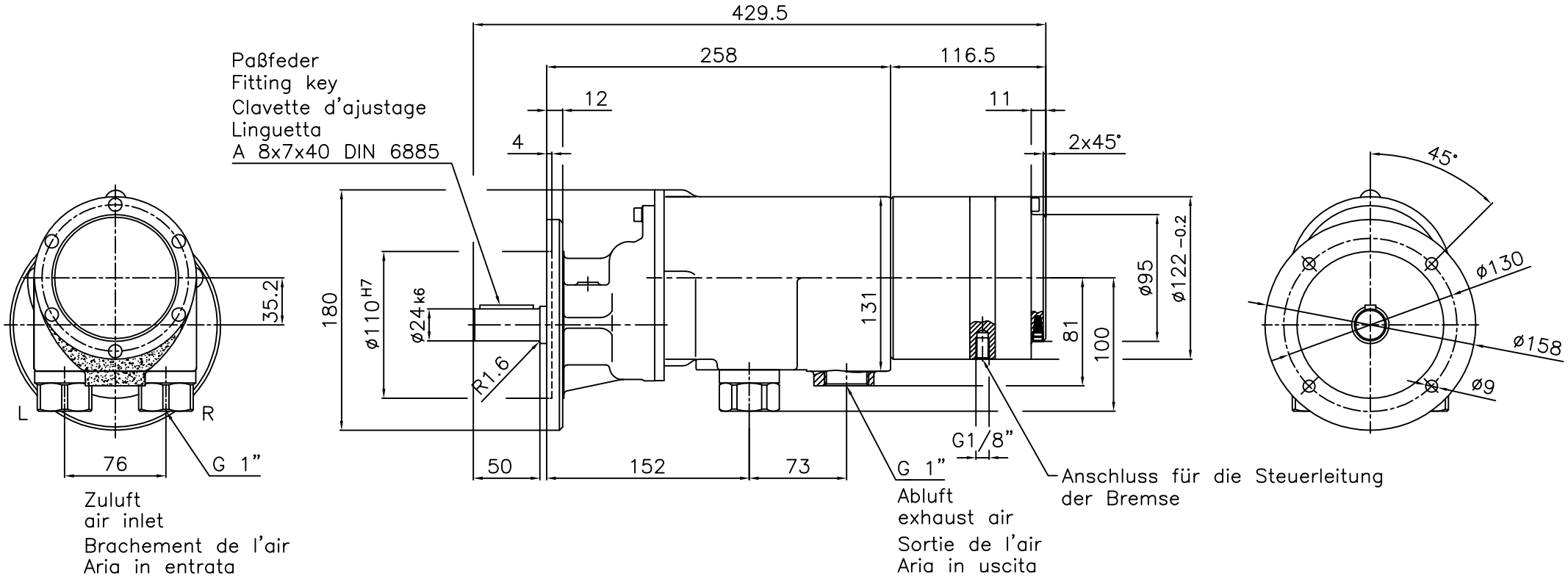

MUB 400–2800 29701865