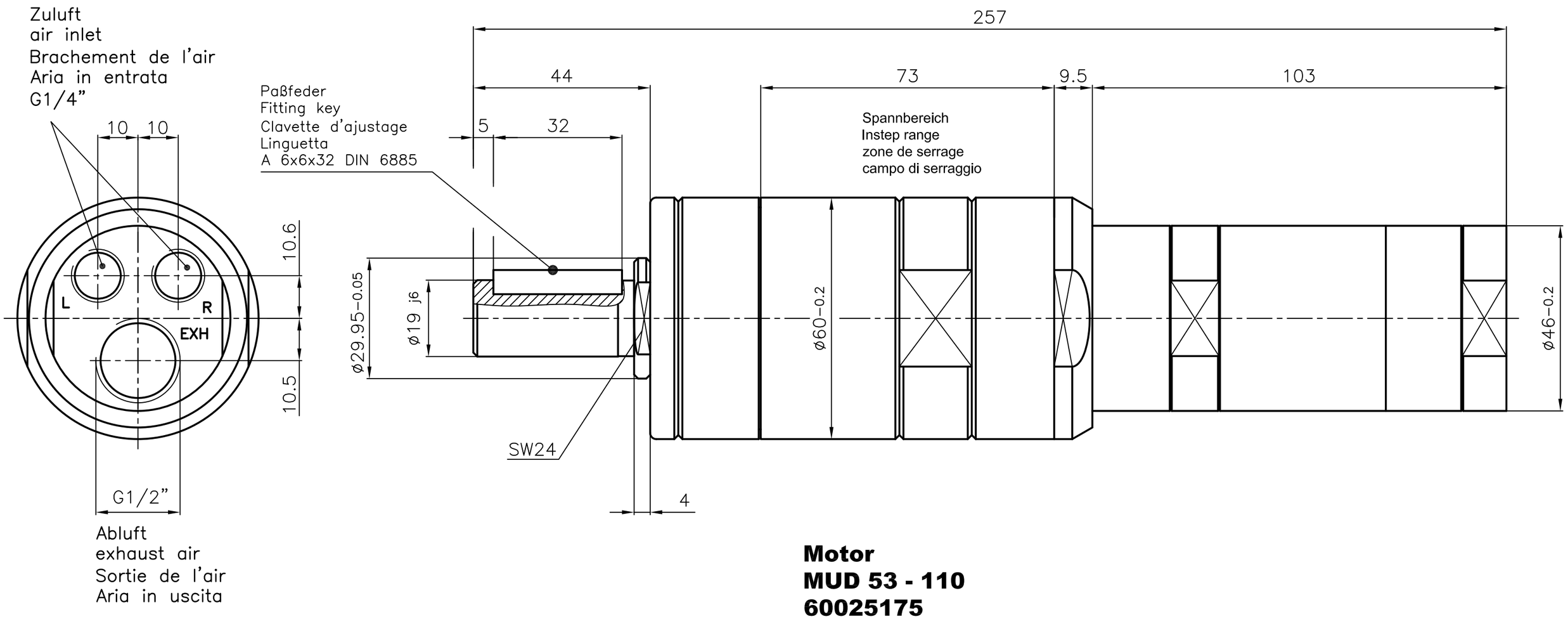

Motor
MUD 53 - 110
60025175