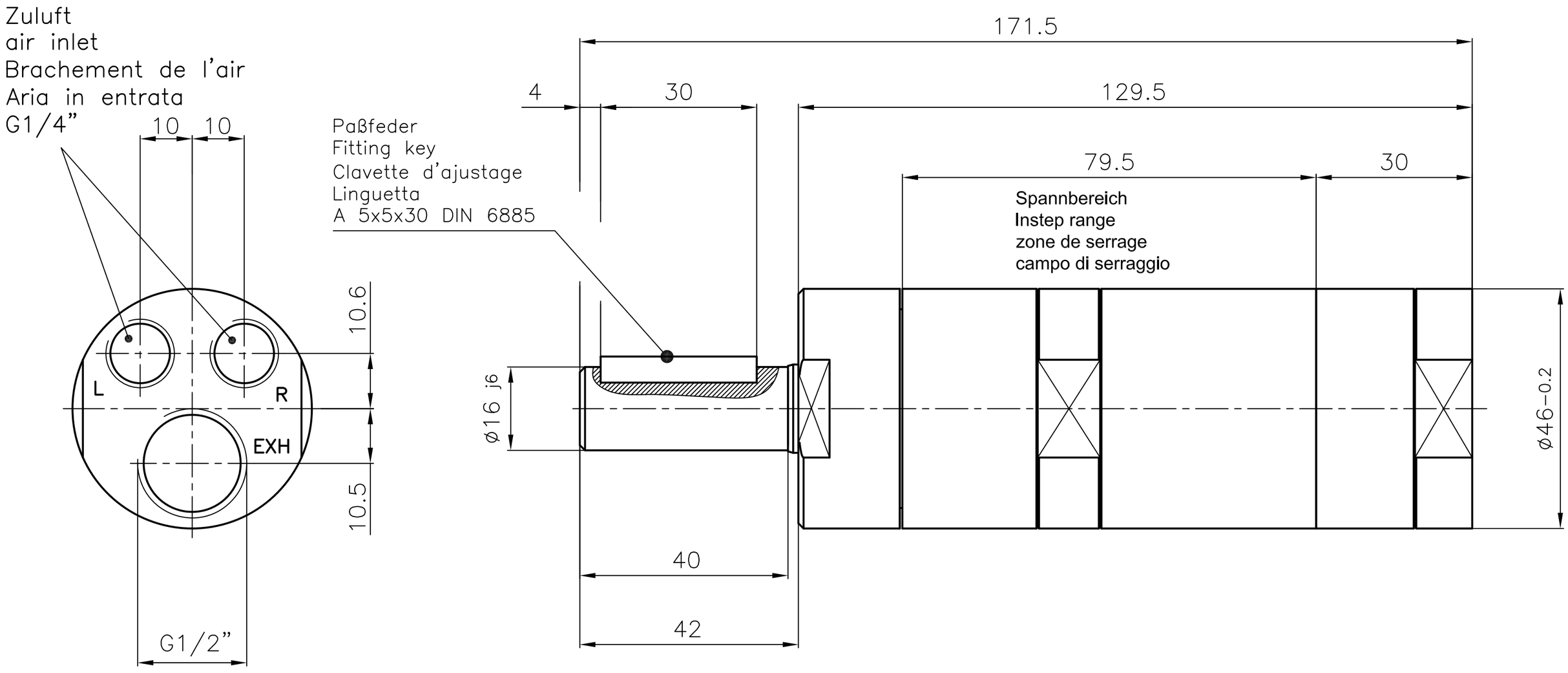

Motor
MUD 53 - 2260
60025055